# L Shape 1700mm Left-Hand Shower Bath

**PRODUCT:** L Shape 1700mm LH Shower Bath
**CODE:** LSHAPE170LH
**SIZE:** L 1700 x W 850
**WATER CAPACITY:** 200L

*Can Be Drilled For Tap Holes*

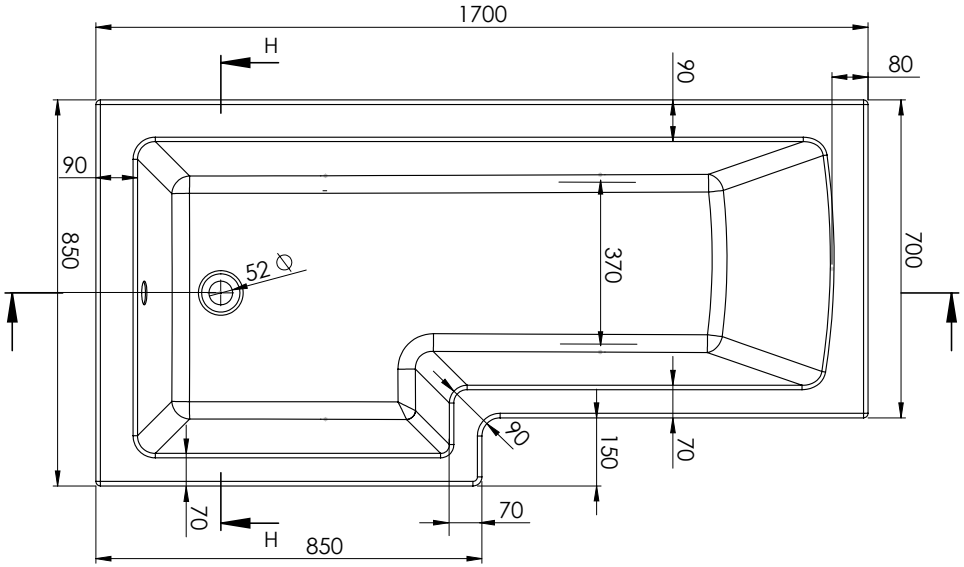


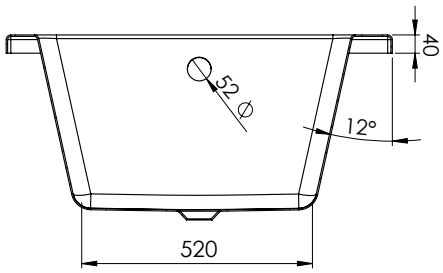


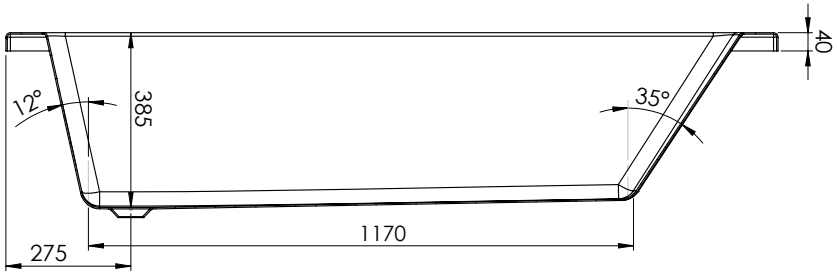


The information contained on this page was correct at date of issue. Fitting dimensions are provided as a guide only. Some variation may occur due to manufacturing tolerances. We pursue a policy of continuing improvement in design and performance of our products and so reserve the right to change specifications without prior notice.